THIS DRAWING IS UNPUBLISHED. RELEASED FOR PUBLICATION 2001
© COPYRIGHT 2001 - ALL RIGHTS RESERVED.

LOC	DIST
A1	-

REVISIONS

P	LTR	DESCRIPTION	DATE	DWN	APVD
	D58	ECR-22-126220	20JAN2022	PJ	FL
	D59	ECR-22-130023	22FEB2022	DC	FL
	D60	ECR-22-154356	06OCT2022	DC	FL
	D61	ECR-22-157753	08NOV2022	TL	FL

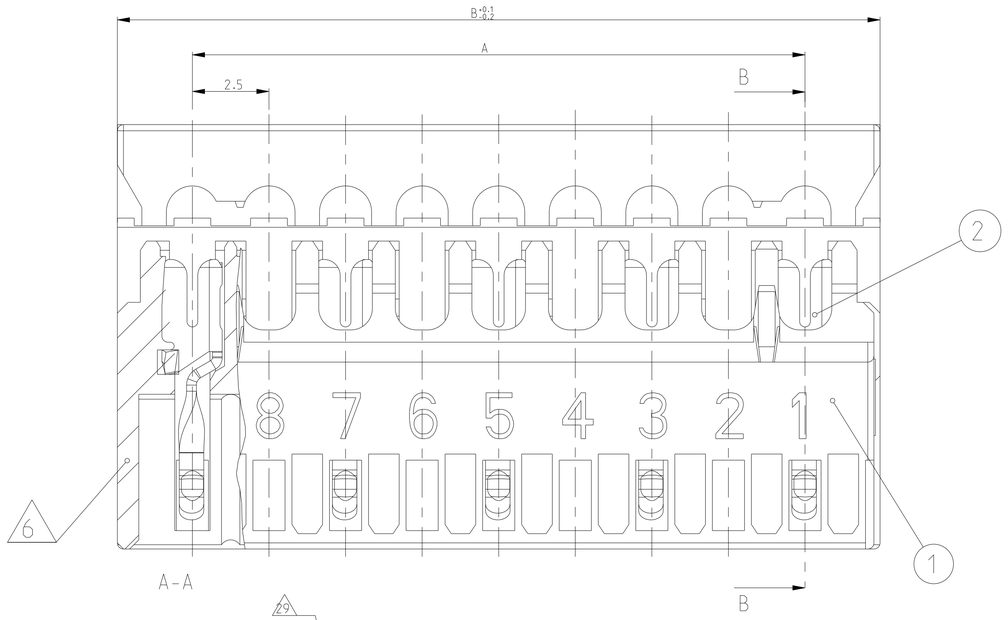

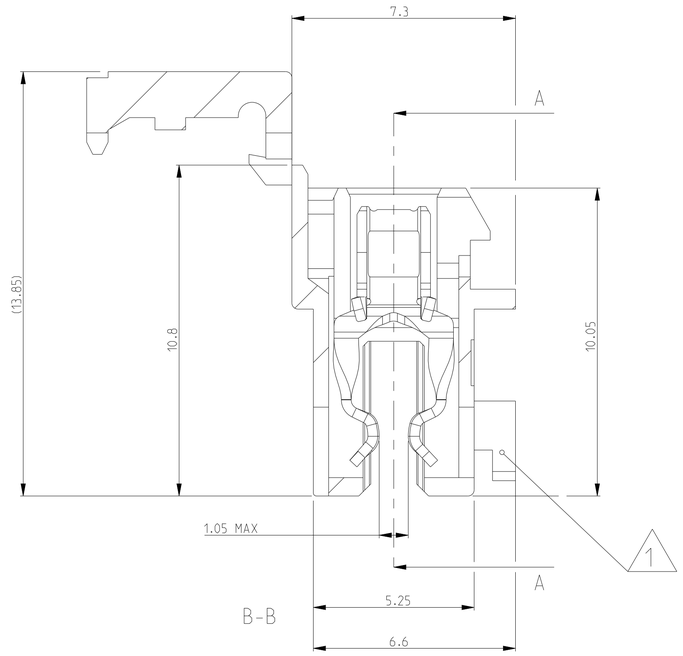

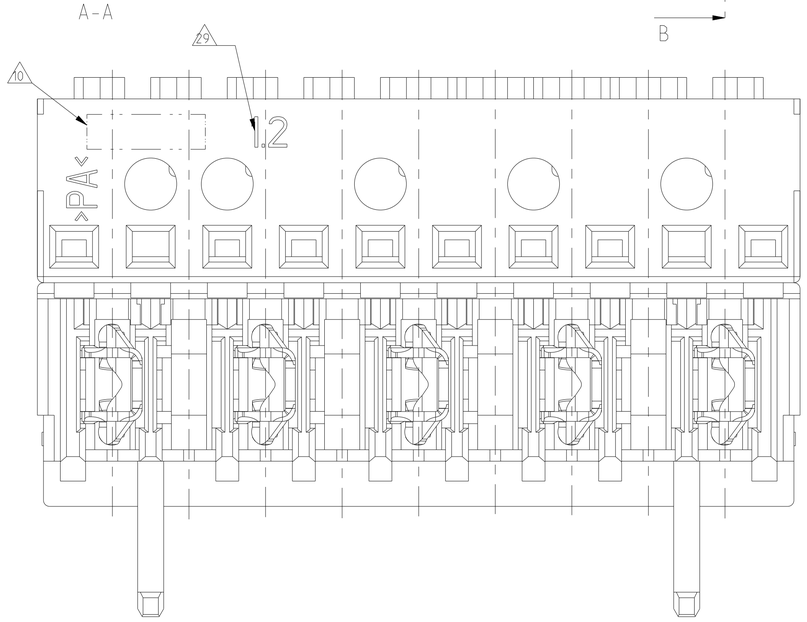

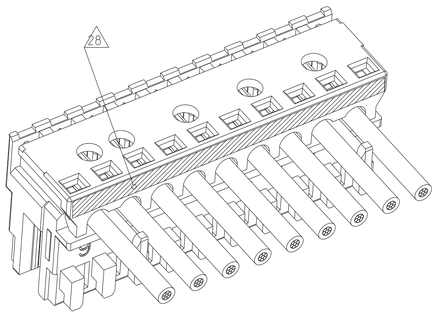

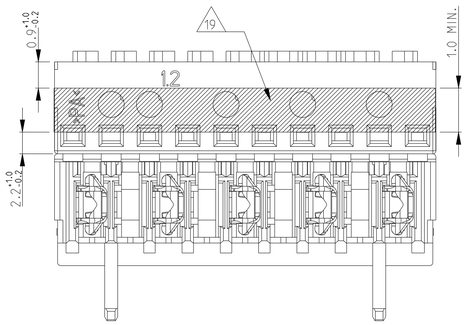

29 CAVITY ID STARTS WITH LETTER FOR PARTS PRODUCTION IN QINGDAO PLANT. SUCH AS "A1.1"

28 STRIPE IN YELLOW COLOR WHERE SHOWN PRESENT ON THE PARTS PRODUCED IN TE COLLEGNO ONLY

27 DIMENSION AVAILABE FOR PART X-2304525-X. X-2304526-X.

26 WITH SPECIAL CHAIN FEATURE

25 SIDE KEYING ON LAST CAVITY THICKNESS=1.5mm

24 SIDE KEYING ON CAVITY 1 THICKNESS=1.5mm

19 COLOR STRIP ON COVER OF HOUSING. NOT THE COLOR OF HOUSING.

18 SLOT. THICK. BETWEEN CAVITIES

17 KEYING. THICK. BETWEEN POSITION

16 SLOT. SLIM. FOR SIDE KEYING. LAST CAVITY

15 SLOT. SLIM. FOR SIDE KEYING.SIDE CAVITY 1

14 SIDE KEYING. SLIM. ON LAST CAVITY

13 SIDE KEYING. SLIM. ON CAVITY 1

12 KEYING SLIM BETWEEN POSITIONS

11 PRELIMINARY PART NOT RELEASED FOR PRODUCTION

10 TE LOGO

9 INCLUSIVE COPPER LOADING

8 PCB PREFERABLY CHAMPHERED

7 SLOT. THICK . FOR SIDE KEYING

6 SIDE KEYING. THICK. ON LAST CAVITY

5 WIRE RANG: 0.22-0.35mm² SEE APPLICATION SPEC. 114-18467

4 IEC60695-2-11 / IEC60335-1 GLOWWIRE TEST 750°C WITHOUT FLAME

3 X..CAVITY LOADED WITH CONTACT
O..CAVITY WITHOUT CONTACT

2 MATING PART: PCB (WITH FRAMES ACC. RAST 2.5 E.G. PN 964 575/576
TAB HEADER (FOR EXAMPLE: X-1971921/922-Y)

1 KEYING RIBS; CUTTING WITH TERMINATION MACHINE POSSIBLE

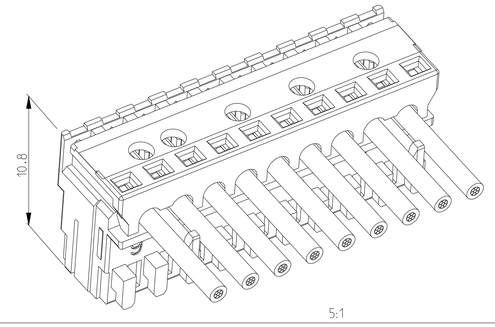

PCB LAYOUT KEYED / CONNECTED ONLY WITH ADDITIONAL FRAME (THICK KEYING)

Leiterplattenanschluss kodiert / nur in Verbindung mit zusaetzlichem Rahmen

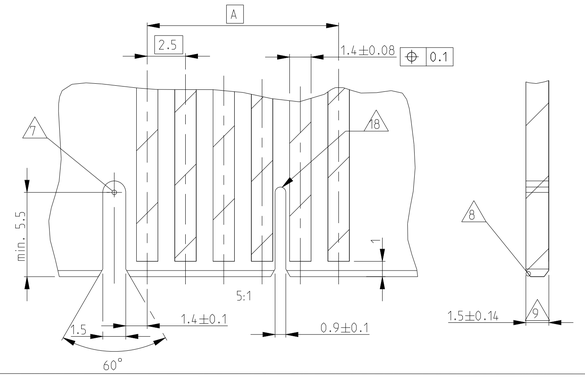

PCB LAYOUT KEYED / CONNECTED ONLY WITH ADDITIONAL FRAME (SLIM KEYING)

Leiterplattenanschluss kodiert / nur in Verbindung mit zusaetzlichem Rahmen

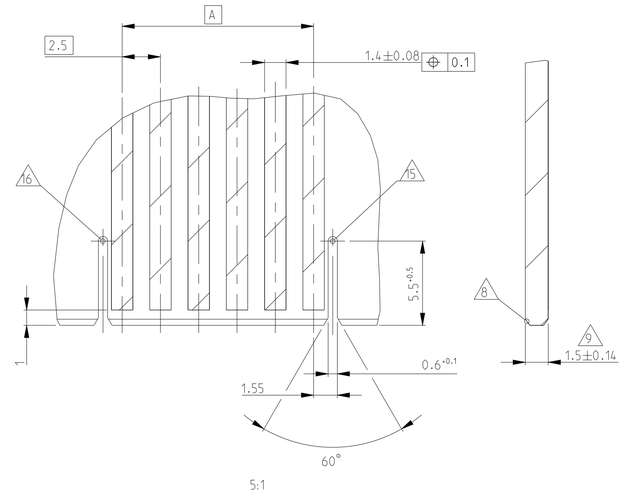

OTHER NOTE SEE SHEET 3 OF 3.

THIS DRAWING IS A CONTROLLED DOCUMENT.	DWN H. Karabiyik 24MAY2002	TE Connectivity	
DIMENSIONS: mm	CHK B. Schnaubelt 24MAY2002		
TOLERANCES UNLESS OTHERWISE SPECIFIED: 0 PLC ±0.2, 1 PLC ±0.2, 2 PLC ±0.2, 3 PLC ±, 4 PLC ±, ANGLES ±°	APVD T. Klenner 24MAY2002	NAME AMP DUOPLUG 2.5 MARK II FEMALE CONNECTOR 3-20 POSITION SELECTIVE LOADED	
MATERIAL - -	PRODUCT SPEC 108-18785		
FINISH - -	APPLICATION SPEC 114-18467	SIZE A1 / CAGE CODE 00779 / DRAWING NO C-1534798	RESTRICTED TO -
	WEIGHT -		
	Customer Drawing	SCALE 5:1 / SHEET 1 OF 3	REV D61

4805 (3/11)

THIS DRAWING IS UNPUBLISHED. RELEASED FOR PUBLICATION 2001
© COPYRIGHT 2001 - ALL RIGHTS RESERVED.

LOC	DIST
A1	-

REVISIONS

P	LTR	DESCRIPTION	DATE	DWN	APVD
	-	SEE SHEET 1	-	-	-

KEYING PLAN

Kodierschema

4-1534798-3

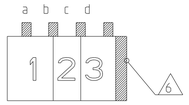

11 2-1534798-6

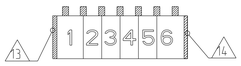

2-1534798-3

11 9-1534798-3

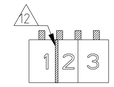

9-1534798-6

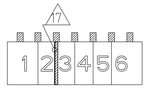

1-1534798-6

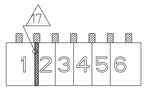

PCB LAYOUT KEYED / CONNECTED ONLY WITH ADDITIONAL FRAME (KEYING THICKNESS-1,5mm)

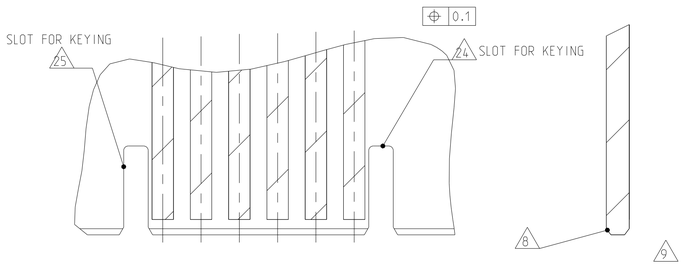

5:1

GWEPT 750°C NO FLAME & UL94-V2, TIN PLATED VERSION

Color Code	20	19	18	17	16	15	14	13	12	11	10	9	8	7	6	5	4	3	2	1	POS. Polzahl 3	DIM A	DIM B	25 KEYING	24 KEYING	17 KEYING	12 KEYING	14 KEYING	13 KEYING	6 KEYING	PN Bestell-Nr.	
		X	0	X	0	X	0	X	0	X	0	X	0	X	0	X	0	X	0	X	19	45	49.9				17/18	-	-	-	2-1534799-9 11	
		X	0	X	0	X	0	X	0	X	0	X	0	X	0	X	0	X	0	X	19	45	49.9				-	-	-	-	1-1534799-9	
				X	0	X	0	X	0	X	0	X	0	X	0	X	0	X	0	X	17	40	44.9				8/9				1534799-7 11	
						X	0	X	0	X	0	X	0	X	0	X	0	X	0	X	15	35	39.9				-	-	-	-	1-1534799-5	
								X	X	0	0	0	X	X	X	X	X	X	X	X	13	30	34.9					-	-	-	4-1534799-3 11	
								X	0	X	0	X	0	X	0	X	0	X	0	X								-	-	-	3-1534799-3	
									X	X	X	X	0	X	0	X	0	X	0	X	12	27.5	32.4								1-1534799-2 11	
									X	X	X	X	0	X	0	X	0	X	0	X							8/9				2-1534799-2 11	
Black										X	0	X	0	0	0	0	0	X	0	X	11	25	29.9					-	-	-	5-1534799-1	
										X	0	X	X	X	X	X	X	0	X	X								-	-	-	4-1534799-1	
										X	0	X	0	X	0	X	0	X	0	X								-	-	-	3-1534799-1	
										X	0	X	0	X	0	0	0	X	X	X								-	-	-	2-1534799-1	
											X	0	X	0	X	0	X	0	0	X	10	22.5	27.4					-	-	-	5-1534798-0	
											X	0	X	X	0	X	0	X	0	X											4-1534798-0 11	
											X	0	X	0	X	0	X	X	0	X								-	-	-	~~3-1534798-0~~	OBSOLETE
											X	X	X	0	X	0	X	0	X	X								-	-	-	2-1534798-0	
												X	0	X	0	0	X	X	X	X	9	20	24.9					-	-	-	7-1534798-9	
												X	0	X	X	X	X	X	X	0								-	-	-	6-1534798-9	
												X	0	X	X	0	X	X	0	X								-	-	-	5-1534798-9	
												X	0	X	X	0	X	0	X	X								-	-	-	4-1534798-9	
												X	0	X	0	X	0	X	0	X								-	-	-	3-1534798-9	
													X	0	X	0	X	X	X	X	8	17.5	22.4					-	-	-	9-1534798-8	
													X	X	0	X	X	X	0	X								-	-	-	8-1534798-8	
													X	0	X	X	X	X	X	X								-	-	-	7-1534798-8	
													X	X	X	X	X	X	0	X								-	-	-	6-1534798-8	
													X	X	X	X	0	X	0	X								-	-	-	5-1534798-8	
													X	X	0	0	0	X	X	X								-	-	-	4-1534798-8	
													X	X	X	0	0	0	X	X								-	-	-	3-1534798-8	
Black														X	0	X	0	X	0	X	7	15	19.9					-	-	-	6-1534798-7	
														X	0	X	0	0	0	X								-	-	-	5-1534798-7	
														X	0	X	X	X	X	X								-	-	-	4-1534798-7 11	
														X	0	X	0	X	0	X								-	-	-	3-1534798-7	
Orange														X	X	0	0	X	0	X								-	-	-	1534798-7	
															X	0	X	X	0	X	6	12.5	17.4				-	X	X	-	2-1534798-6	
Black															X	0	X	X	0	X						1/2	-	-	-		1-1534798-6	
Red															X	0	X	X	0	X						2/3	-	-	-		9-1534798-6	
															X	0	X	0	X	X								-	-	-	8-1534798-6	
															X	X	X	0	X	X								-	-	-	7-1534798-6	
															0	X	X	X	0	X								-	-	-	~~6-1534798-6~~	OBSOLETE
															X	0	X	X	0	X								-	-	-	5-1534798-6	
															X	0	X	X	0	X				X	X		3/4				2314657-6	
															X	0	X	X	0	X				X	X		4/5				1-2314657-6 11	
															0	0	0	X	0	X								-	-	-	~~4-1534798-6~~	OBSOLETE
															X	X	0	X	0	X								-	-	-	3-1534798-6	
																X	X	0	X	X	5	10	14.9				1/2				9-1534798-5	
Brown																X	0	X	0	X							4/5				8-1534798-5	
																X	0	X	0	0								-	-	-	7-1534798-5	
Black																X	0	X	0	X								-	-	-	6-1534798-5	
																X	X	X	0	X								-	-	-	5-1534798-5	
																X	0	0	0	X								-	-	-	4-1534798-5	
																X	0	X	0	X								-	-	-	3-1534798-5	
																X	0	X	X	X								-	-	-	2-1534798-5 11	
																	X	X	0	X	4	7.5	12.4					-	-	-	3-1534798-4 11	
Orange																		X	0	X	3	5	9.9					-	-	-	1-1534798-3	
																		X	0	X						2/3	-	-	-	-	1534798-3	
Orange																		X	0	X							1/2	-	-	-	9-1534798-3	
																		X	0	X							2/3	-	-	-	2-1534798-3	
Brown																		X	0	X								-	-	-	8-1534798-3	
Green																		X	0	X								-	-	-	7-1534798-3	
Blue																		X	0	X								-	-	-	6-1534798-3	
																		0	X	X								-	-	-	5-1534798-3	
Violet																		X	0	X								-	-	X	4-1534798-3	
																		X	0	X								-	-	-	3-1534798-3	

KAMMERBESTUECKUNG (CAVITIES LOADED)

POS.	PN Bestell-Nr.	DESCRIPTION Beschreibung	MATERIAL	COLOUR/FINISH Farbe/Oberflaeche
2	SEE TABLE siehe Tabelle	CONTACT/Kontakt	CuSn	TINNED/verzinnt
1		HOUSING/Federleistengeh.	HIGH TEMP PLASTIC 4	NATUR/Natur

THIS DRAWING IS A CONTROLLED DOCUMENT.

DIMENSIONS: mm

TOLERANCES UNLESS OTHERWISE SPECIFIED:
0 PLC ±0.2
1 PLC ±0.2
2 PLC ±0.2
3 PLC ±
4 PLC ±
ANGLES ±1°

MATERIAL - -

FINISH - -

DWN	H. Karabiyik	24MAY2002
CHK	B. Schnaubelt	24MAY2002
APVD	T. Klenner	24MAY2002

PRODUCT SPEC 108-18785
APPLICATION SPEC 114-18467
WEIGHT -

TE Connectivity

NAME AMP DUOPLUG 2.5 MARK II FEMALE CONNECTOR 3-20 POSITION SELECTIVE LOADED

SIZE	CAGE CODE	DRAWING NO	RESTRICTED TO
A1	00779	C-1534798	-

Customer Drawing | SCALE 5:1 | SHEET 2 OF 3 | REV D61

THIS DRAWING IS UNPUBLISHED. RELEASED FOR PUBLICATION 2001
© COPYRIGHT 2001 - ALL RIGHTS RESERVED.

LOC	DIST

REVISIONS

P	LTR	DESCRIPTION	DATE	DWN	APVD
rev_sym_1	rev_desc_1	rev_date_1	rev_dwn_1	rev_appr_1	
rev_sym_2	rev_desc_2	rev_date_2	rev_dwn_2	rev_appr_2	
rev_sym_3	rev_desc_3	rev_date_3	rev_dwn_3	rev_appr_3	
rev_sym_4	rev_desc_4	rev_date_4	rev_dwn_4	rev_appr_4	

KEYING 22

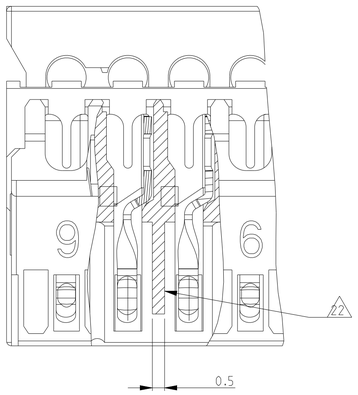

KEYING 23

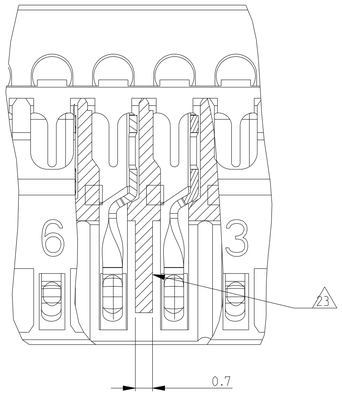

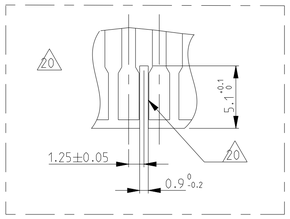

23 KEYING. SPECIAL THICK. BETWEEN POSITION

22 KEYING. SPECIAL THIN. BETWEEN POSITION

21 SLOT FOR KEYING SPECIAL. BETWEEN POSITION

20 RECOMMENDED PCB CUTOFF DIMENSION FOR THE PN X-2304527-Y AND X-2304528-Y

GWEPT 750°C NO FLAME & UL94-V0, SILVER PLATED VERSION

	20	19	18	17	16	15	14	13	12	11	10	9	8	7	6	5	4	3	2	1	POS. Polzahl	DIM A	DIM B	12 KEYING	17 KEYING	23 KEYING	22 KEYING	PN 26 Bestell-Nr.
Blue																	X	0	X		3	5	9.9					5-2369989-3 11
																	X	0	X									4-2369989-3 11
Color Code	KAMMERBESTUECKUNG (CAVITIES LOADED) 3																											

POS.	PN Bestell-Nr.	DESCRIPTION Beschreibung	MATERIAL	COLOUR/FINISH Farbe/Oberflaeche
2	SEE TABLE siehe Tabelle	CONTACT/Kontakt	CuSn	SILVERED
1 4		HOUSING/Federleistengeh.	HIGH TEMP PLASTIC	NATUR/Natur

PA GF (A), GWEPT 750°C NO FLAME & UL94-V0, TIN PLATED VERSION

	20	19	18	17	16	15	14	13	12	11	10	9	8	7	6	5	4	3	2	1	POS. Polzahl	DIM A	DIM B	12 KEYING	17 KEYING	23 KEYING	22 KEYING	PN 26 Bestell-Nr.
								X	0	X	0	X	0	X	0	X	0	X	0	X	13	30	34.9					1-2304528-3
Blue								X	0	X	X	X	X	X	X	X	X	X	X	X						-	2/3	2304528-3
									X	X	0	X	0	X	0	X	0	X	0	X	12	27.5	32.4					2304528-2 11
										X	X	X	0	X	0	X	0	X	0	X	11	25	29.9			-	-	3-2304528-1
										X	0	X	0	X	0	0	0	X	X	X								2-2304528-1
Orange										X	0	X	0	X	0	X	0	X	X	X						-	-	1-2304528-1
Green										X	0	X	0	X	0	X	0	X	0	X						-	-	2304528-1
											X	X	X	0	X	0	X	0	X	X	10	22.5	27.4					2-2304528-0
											X	0	X	0	X	0	X	0	0	X								1-2304528-0
GREEN												X	0	X	0	X	0	X	0	X	9	20	24.9				1/2	4-2304527-9
												X	0	X	0	X	0	X	0	X								3-2304527-9
												X	0	X	X	0	X	X	0	X								2-2304527-9
Black												X	X	0	X	0	X	X	0	X						-	2/3	1-2304527-9
Blue												X	X	X	X	X	X	0	X	X						-	2/3	2304527-9
														X	0	X	0	X	0	X	7	15	19.9					4-2304527-7
														X	X	X	0	X	0	X								3-2304527-7
Black														X	X	X	X	0	0	X						-	2/3	2-2304527-7
Green														X	0	X	0	X	0	X						-	-	1-2304527-7
Blue														X	0	X	0	X	0	X						-	-	2304527-7
Red															X	0	X	X	0	X	6	12.5	17.4			-	2/3	7-2304527-6
Red															X	X	0	X	0	X								6-2304527-6
Black															X	0	X	X	0	X								5-2304527-6
Green															X	X	0	X	0	X								4-2304527-6
															0	0	X	X	X	X								3-2304527-6
															X	0	X	X	0	X								2-2304527-6
Blue															X	0	X	0	X	X						-	-	1-2304527-6
Red															X	0	X	X	0	X						-	-	2304527-6
Red																X	X	X	0	X	5	10	14.9					4-2304527-5
Red																X	0	0	0	X				3/4				3-2304527-5
																X	0	0	0	X								2-2304527-5
																X	0	X	0	X						-	-	1-2304527-5
Green																X	0	X	0	X						-	-	2304527-5
Black																	X	X	0	0	4	7.5	12.4			-	3/4	2304527-4
Red																	X	0	X		3	5	9.9	2/3				8-2304527-3
Red																	X	0	X					1/2				7-2304527-3
																	X	0	X					2/3				6-2304527-3
Blue																	X	0	X									5-2304527-3
																	X	0	X									4-2304527-3
Black																	X	0	X							1/2	-	3-2304527-3
Red																	X	0	X							2/3	-	2-2304527-3
Brown																	X	0	X							-	-	1-2304527-3
Orange																	X	0	X							-	-	2304527-3
Color Code	KAMMERBESTUECKUNG (CAVITIES LOADED) 3																											

POS.	PN Bestell-Nr.	DESCRIPTION Beschreibung	MATERIAL	COLOUR/FINISH Farbe/Oberflaeche
2	SEE TABLE siehe Tabelle	CONTACT/Kontakt	CuSn	TINNED/verzinnt
1 4		HOUSING/Federleistengeh.	HIGH TEMP PLASTIC	NATUR/Natur

PA GF (B), GWEPT 750°C NO FLAME & UL94-V0, NATURAL, TIN PLATED VERSION

	20	19	18	17	16	15	14	13	12	11	10	9	8	7	6	5	4	3	2	1	POS. Polzahl	DIM A	DIM B	12 KEYING	17 KEYING	23 KEYING	22 KEYING	PN 11 Bestell-Nr.
										X	0	X	0	X	0	X	0	X	0	X	11	25	29.9					1-2406233-1
														X	0	X	0	X	X	X	7	15	19.9					1-2406232-7
														X	0	X	0	X	0	X								2406232-7
																X	0	0	0	X	5	10	14.9					3-2406232-5
																X	0	X	X	X								1-2406232-5
																X	0	X	0	X								2406232-5
																		X	0	X	3	5	9.9					2406232-3
Color Code	KAMMERBESTUECKUNG (CAVITIES LOADED) 3																											

POS.	PN Bestell-Nr.	DESCRIPTION Beschreibung	MATERIAL	COLOUR/FINISH Farbe/Oberflaeche
2	SEE TABLE siehe Tabelle	CONTACT/Kontakt	CuSn	TINNED/verzinnt
1 4		HOUSING/Federleistengeh.	HIGH TEMP PLASTIC	NATUR/Natur

THIS DRAWING IS A CONTROLLED DOCUMENT.

DIMENSIONS: mm

TOLERANCES UNLESS OTHERWISE SPECIFIED:
0 PLC ±0.2
1 PLC ±0.2
2 PLC ±0.2
3 PLC ±
4 PLC ±
ANGLES ±1°

MATERIAL -
FINISH -

DWN H. Karabiyik 24MAY2002
CHK B. Schnaubelt 24MAY2002
APVD T. Klenner 24MAY2002
PRODUCT SPEC 108-18785
APPLICATION SPEC 114-18467
WEIGHT -

TE Connectivity

NAME AMP DUOPLUG 2.5 MARK II FEMALE CONNECTOR 3-20 POSITION SELECTIVE LOADED

SIZE	CAGE CODE	DRAWING NO	RESTRICTED TO
A1	00779	C-1534798	-

Customer Drawing | SCALE 10:1 | SHEET 3 OF 3 | REV U61