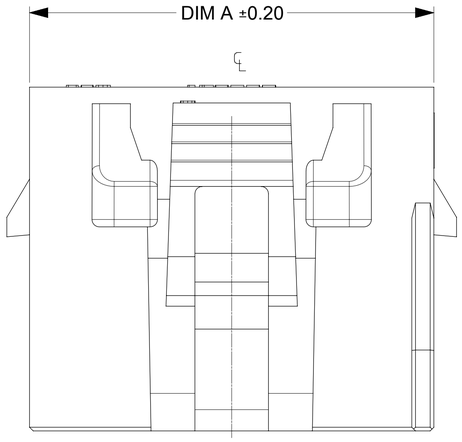

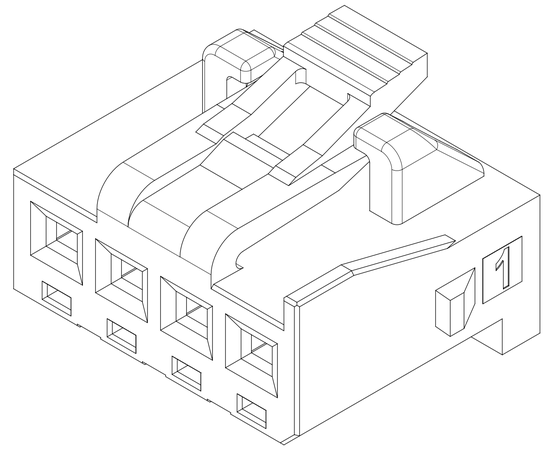

ISOMETRIC VIEW FOR 4 CIRCUIT

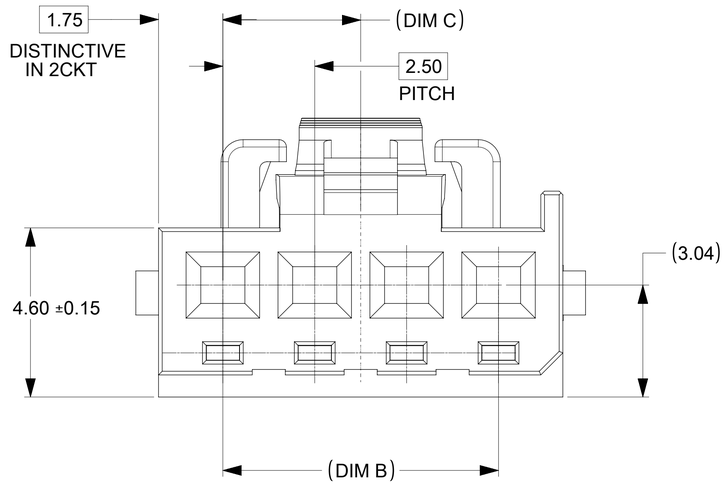

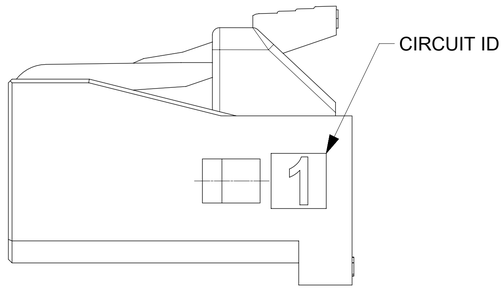

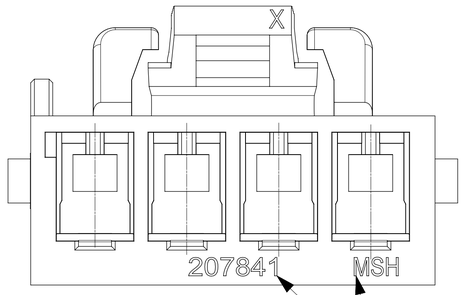

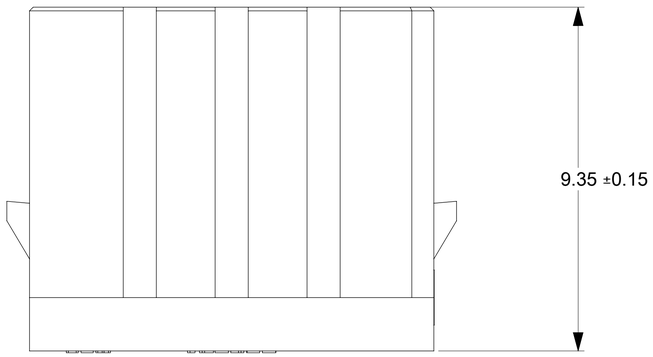

DISTINCTIVES IN 2 CIRCUIT

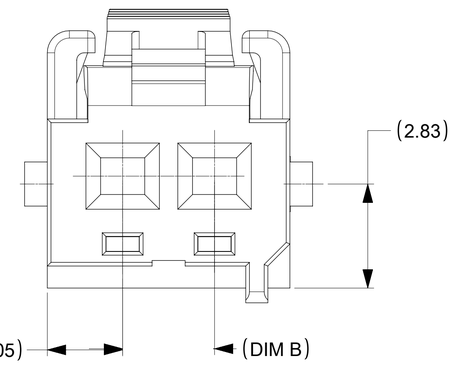

CKT	PART NUMBER	DIM.A	DIM. B	DIM. C
02	2078410002	6.61	2.50	1.25
03	2078410003	8.50	5.00	2.50
04	2078410004	11.00	7.50	3.75
05	2078410005	13.50	10.00	5.00
06	2078410006	16.00	12.50	6.25
07	2078410007	18.50	15.00	7.50
08	2078410008	21.00	17.50	8.75

NOTES:
1. MATERIAL: PA66, UL 94V-0, COLOR-BLACK
2. PRODUCT SPECIFICATION: 2079020001-PS
3. PACKAGING SPECIFICATION: 2078410000-PK
4. COSMETIC SPECIFICATION: PS-45499-002 CLASS B
5. HOUSING ACCEPTS TERMINALS FROM 46626 SERIES
6. MOLEX LOGO AND SERIES ID

DOCUMENT STATUS	P1	RELEASE DATE	2022/05/13 14:35:39

SYMBOLS: A = 0; C = 0; F = 0; S = 0; ▼ = 0; C = 0; ☒ = 0; ■ = 0; V = 0

THIS DRAWING CONTAINS INFORMATION THAT IS PROPRIETARY TO MOLEX ELECTRONIC TECHNOLOGIES, LLC AND SHOULD NOT BE USED WITHOUT WRITTEN PERMISSION

DIMENSION UNITS: mm
SCALE: 10:1
GENERAL TOLERANCES (UNLESS SPECIFIED)
ANGULAR TOL ± 0.5 °
4 PLACES ±
3 PLACES ±
2 PLACES ± 0.25
1 PLACE ± 0.3
0 PLACES ±
DRAFT WHERE APPLICABLE MUST REMAIN WITHIN DIMENSIONS

CURRENT REV DESC:
EC NO: 706742
DRWN: SHRUTJ 2022/04/20
CHK'D: SHRUTJ 2022/05/13
APPR: ISHWARG 2022/05/13
INITIAL REVISION:
DRWN: SUDAYGUNAGI 2018/06/18
APPR: ISHWARG 2019/02/20

THIRD ANGLE PROJECTION
DRAWING: A1-SIZE
SERIES: 207841

molex

RECEPTACLE HOUISNG FOR KK PLUS 250

PRODUCT CUSTOMER DRAWING

DOCUMENT NUMBER	DOC TYPE	DOC PART	REVISION
2078410004-SD	PSD	000	A2

MATERIAL NUMBER
CUSTOMER
SHEET NUMBER: 1 OF 2

POLARIZATION

2 & 3 CKT

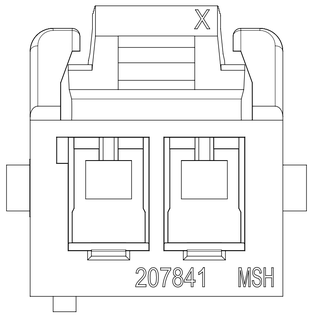

4 TO 10 CKT

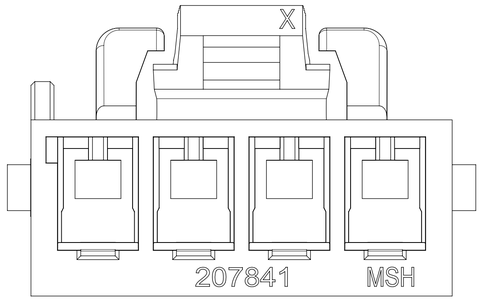

ISOMETRIC OF 2 & 3 CKT

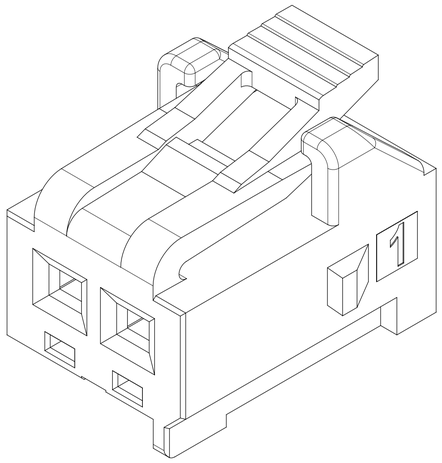

ISOMETRIC OF 4 TO 10 CKT

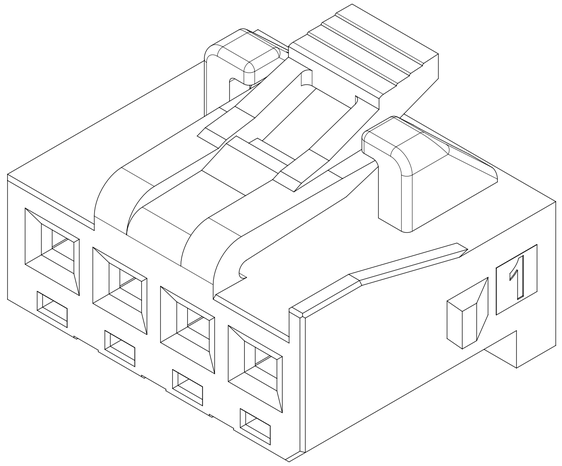

SYMBOLS	
A	= 0
C	= 0
F	= 0
S	= 0
	= 0
C	= 0
	= 0
	= 0
D	= 0

THIS DRAWING CONTAINS INFORMATION THAT IS PROPRIETARY TO MOLEX ELECTRONIC TECHNOLOGIES, LLC AND SHOULD NOT BE USED WITHOUT WRITTEN PERMISSION

DIMENSION UNITS	SCALE
mm	10:1

GENERAL TOLERANCES (UNLESS SPECIFIED)		
ANGULAR TOL	±	0.5 °
4 PLACES	±	
3 PLACES	±	
2 PLACES	±	0.25
1 PLACE	±	0.3
0 PLACES	±	

DRAFT WHERE APPLICABLE MUST REMAIN WITHIN DIMENSIONS

CURRENT REV DESC:

EC NO: 706742
DRWN: SHRUTJ 2022/04/20
CHK'D: SHRUTJ 2022/05/13
APPR: ISHWARG 2022/05/13

INITIAL REVISION:
DRWN: SUDAYGUNAGI 2018/06/18
APPR: ISHWARG 2019/02/20

THIRD ANGLE PROJECTION | DRAWING: A1-SIZE | SERIES: 207841

molex

RECEPTACLE HOUISNG FOR KK PLUS 250

PRODUCT CUSTOMER DRAWING

DOCUMENT NUMBER	DOC TYPE	DOC PART	REVISION
2078410004-SD	PSD	000	A2

MATERIAL NUMBER | CUSTOMER | SHEET NUMBER: 2 OF 2

DOCUMENT STATUS	P1	RELEASE DATE	2022/05/13 14:35:39

TEMPLATE: PS2000 SP-A4-001
REVISION: H
DATE: 2018/07/18